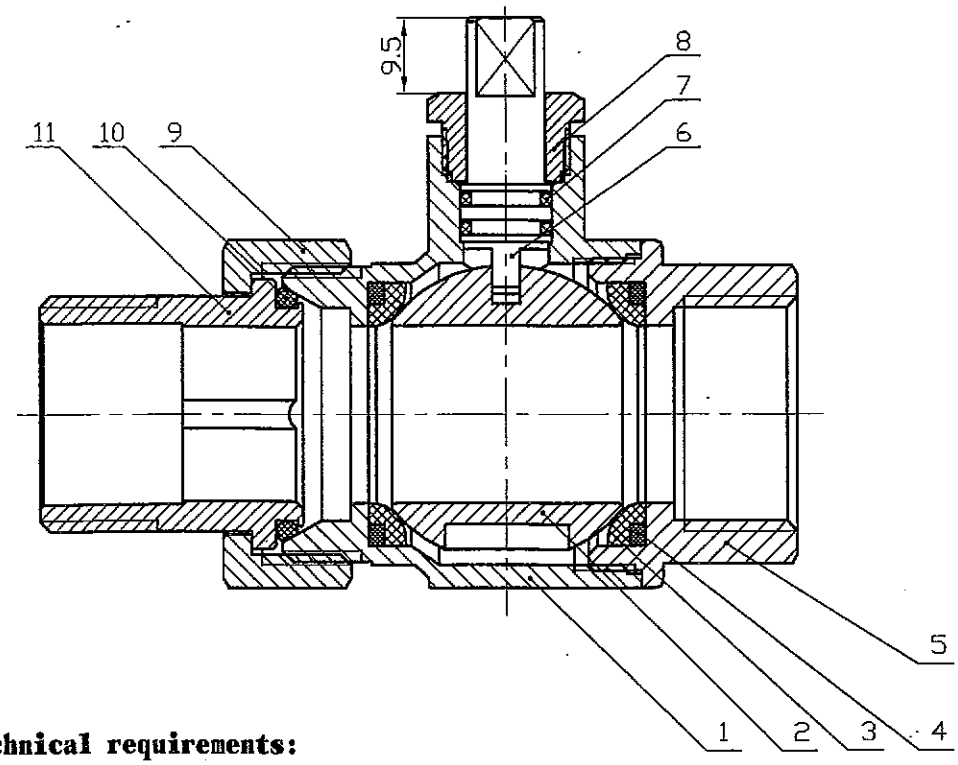

Technical requirements:

1, the surface should be clean, without bumps, scratches.
2, the handle rotation flexibility, no obstruction and anomalies.

No.	Drawing No.	Name	Quantity	Material	Weight	Surface treatment	Remark
11		**Takeover**	1	**CW617N**		**Nickel**	
10		O-rings	1	EPDM		**Black**	
9		**hexagonal nut**	1	**CW617N**		**Nickel**	
8		**pressing cap**	1	**CW617N**		**Nickel**	
7		O-rings	2	EPDM		**Black**	
6		**shaft**	1	**CW617N**		**Natural color**	
5		**Bonnet**	1	**CW617N**		**two-tone**	
4		**Gasket**	2	**Silicone Rubber**		**Natural color**	
3		**Seat**	2	PTFE		**white**	
2		**Ball**	1	**CW617N**		**polished chrome plating**	
1		**Valve body**	1	**CW617N**		**Slinging nickel plating**	

Weight		Proportion	Name	
Blank	End product			**1" ball valve**
	700g			
			No.	**2-way 1" ball valve**